ORION I 1500, 930 (BBBL), SPOT, RETRO, WHITE

ITAB

- Discreet and clean-looking ceiling
- Swivel the light up to 30˚ in any direction
- Available in white, black and grey

TECHNICAL SPECIFICATION

Product Code	300-41041010062
Colour	White
Control	On/off
CRI light colour	930 (BBBL)
Delivered lumen output lm	1266
Driver	Stand alone, included
EEI	E
Light distribution	Spot
Lightsource	LED COB
Mains input voltage	220-240V
Measurements A	165
Measurements B	158
Measurements C	103
Mounting	Recessed
Position	360°/30°
Lifetime	L80 B10 50.000h
Protection	IP 20, class III
Sawing instructions unit	mm
Sawing instructions x	157
Sawing instructions y	150
Start Time	Instant
System power W	9,3
Unit	mm
Weight	0,9

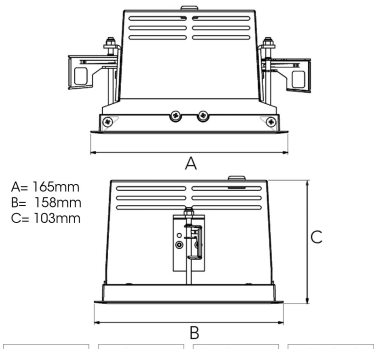

Spot		Medium		Flood		Wide Flood	
	16°		28°		40°		65°
m	ø	m	ø	m	ø	m	ø
1.0	0.28	1.0	0.50	1.0	0.73	1.0	1.28
2.0	0.56	2.0	1.00	2.0	1.46	2.0	2.56
3.0	0.83	3.0	1.51	3.0	2.18	3.0	3.84

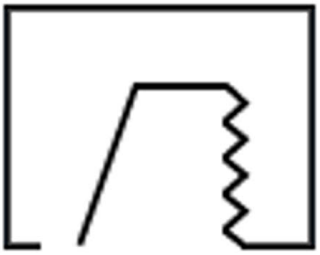

157 x 150mm

ITAB Lighting
Europe, Asia, Middle East
Phone: +46 910 733 790
info@nordiclight.se

ITAB Lighting
North America
Phone: +1 614 421 8419
na@nordiclight.se

Please note that this product sheet is for a specific product and colour. The pictures may show examples of other available colours