TITAN MINI NA 1500, 930 (BBBL), FLOOD, WHITE

ITAB

- Product is title 24 compatible
- Discrete and clean-looking ceiling
- Available in various sizes and lumen packages
- Available in white, black and grey

TECHNICAL SPECIFICATION

Product Code	308-7502-10
Colour	White
Control	0-10 V
CRI light colour	930 (BBBL)
Delivered lumen output lm	1400
Driver	Stand alone, included
Light distribution	Flood
Lightsource	LED COB
Mains input voltage	120-277V
Measurements A	10,7
Measurements B	5,5
Measurements C	6,6
Measurements D	4
Measurements E	9,4
Mounting	Recessed
Position	Fixed
Lifetime	L80 B10, 50.000h
Protection	For indoor use only
Sawing instructions diameter	3,62
Sawing instructions unit	inch
Start Time	Instant
System power W	12
Unit	inch

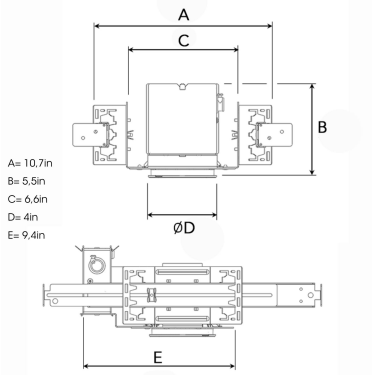

Spot		Medium		Flood		Wide Flood	
	16°		28°		40°		65°
m	ø	m	ø	m	ø	m	ø
1.0	0.28	1.0	0.50	1.0	0.73	1.0	1.28
2.0	0.56	2.0	1.00	2.0	1.46	2.0	2.56
3.0	0.83	3.0	1.51	3.0	2.18	3.0	3.84

3,62in

ITAB Lighting
Europe, Asia, Middle East
Phone: +46 910 733 790
info@nordiclight.se

ITAB Lighting
North America
Phone: +1 614 421 8419
na@nordiclight.se

Please note that this product sheet is for a specific product and colour. The pictures may show examples of other available colours