ORION I 2500, 930 (BBBL), FRAME, FLOOD W/ GLASS, GREY

- Moderne og minimalistisk downlight som bevarer et rent uttrykk i himlingen.
- Kan vinkles opptil 30 grader i alle retninger
- Tilgjengelig i fargene hvit, svart og grå

TECHNICAL SPECIFICATION

Product Code	300-13061130062
Colour	Grey
Control	On/off
CRI light colour	930 (BBBL)
Delivered lumen output lm	2468
Driver	Stand alone, included
EEI	E
Light distribution	Flood
Lightsource	LED COB
Mains input voltage	220-240 V
Measurements A	165
Measurements B	158
Measurements C	103
Mounting	Recessed
Position	360°/30°
Lifetime	L80 B10, 50.000h
Protection	IP 20, class III
Sawing instructions x	157
Sawing instructions y	150
Start Time	Instant
System power W	18,4
Unit	mm
Weight	0,9

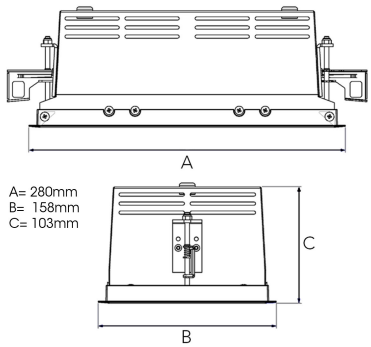

Spot		Medium		Flood		Wide Flood	
	16°		28°		40°		65°
m	ø	m	ø	m	ø	m	ø
1.0	0.28	1.0	0.50	1.0	0.73	1.0	1.28
2.0	0.56	2.0	1.00	2.0	1.46	2.0	2.56
3.0	0.83	3.0	1.51	3.0	2.18	3.0	3.84

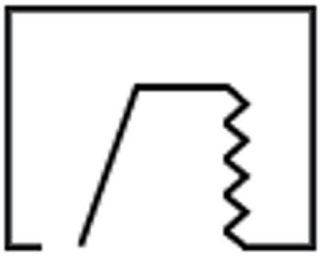

272 x 150mm

ITAB Lighting
Europe, Asia, Middle East
Phone: +46 910 733 790
info@nordiclight.se

ITAB Lighting
North America
Phone: +1 614 421 8419
na@nordiclight.se

Please note that this product sheet is for a specific product and colour. The pictures may show examples of other available colours