# FLEX I 3000 (BBBL), 930, WIDE FLOOD, WHITE

- Moderni, minimalistinen ja siisti
- Saatavilla eri lumeneissa
- Asennus ilman työkaluja
- Saatavilla valkoisena, mustana ja harmaana
- Upotettava ja kääntyvä

## TECHNICAL SPECIFICATION

| | |
|---|---|
| Product Code | 306-11071040062 |
| Colour | White |
| Control | On/off |
| CRI light colour | 930 (BBBL) |
| Delivered lumen output lm | 2841 |
| Driver | Stand alone, included |
| EEI | E |
| Light distribution | Wide flood |
| Lightsource | LED COB |
| Mains input voltage | 220-240V |
| Measurements A | 202 |
| Measurements B | 70 |
| Measurements C | 202 |
| Measurements D | 179 |
| Mounting | Recessed |
| Position | 360°/60° |
| Lifetime | L80 B10 50.000h |
| Protection | IP 20, class III |
| Sawing instructions unit | mm |
| Sawing instructions x | 177 |
| Sawing instructions y | 191 |
| Start Time | Instant |
| System power W | 21,6 |
| Unit | mm |
| Weight | 1,1 |

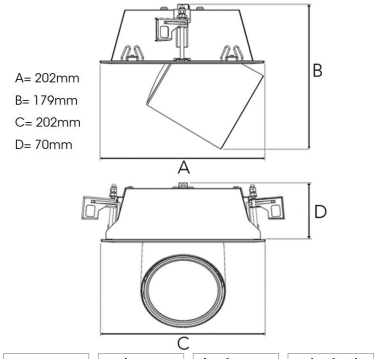


| Spot | | Medium | | Flood | | Wide Flood | |
|---|---|---|---|---|---|---|---|
| | 14° | | 27° | | 38° | | 56° |
| m | ø | m | ø | m | ø | m | ø |
| 1.0 | 0.25 | 1.0 | 0.48 | 1.0 | 0.69 | 1.0 | 1.07 |
| 2.0 | 0.49 | 2.0 | 0.95 | 2.0 | 1.39 | 2.0 | 2.14 |
| 3.0 | 0.74 | 3.0 | 1.43 | 3.0 | 2.08 | 3.0 | 3.22 |

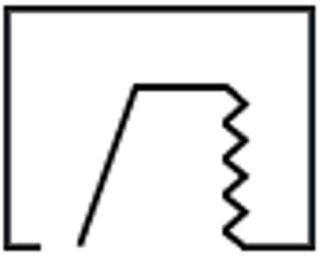

177 x 191mm

**ITAB Lighting**
**Europe, Asia, Middle East**
Phone: +46 910 733 790
info@nordiclight.se

**ITAB Lighting**
**North America**
Phone: +1 614 421 8419
na@nordiclight.se

*Please note that this product sheet is for a specific product and colour. The pictures may show examples of other available colours*