GLOBE MAXI 4000, 930 (BBBL), FLOOD, BLACK

- Groot, aantrekkelijk design
- Functionele en decoratieve verlichting.
- Onderdeel van een reeks hanglampen, verkrijgbaar in verschillende formaten en lumen-pakketten.
- Te monteren aan 3-fasige rail of plafond.

TECHNICAL SPECIFICATION

Product Code	221-562-20
Colour	Black
Control	On/off
CRI light colour	930 (BBBL)
Delivered lumen output lm	3750
Driver	Built in
EEI	E
Light distribution	Flood
Lightsource	LED COB
Mains input voltage	220-240 V
Measurements A	600
Measurements B	483
Measurements C	600
Mounting	Suspended
Position	Fixed
Lifetime	L80 B10, 50.000h
Protection	IP 20, class I
Start Time	Instant
System power W	38
Unit	mm
Weight	9

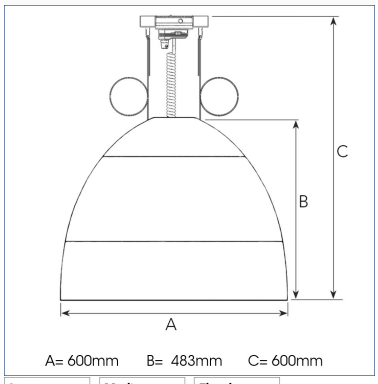

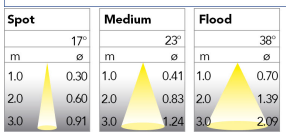

ITAB Lighting
Europe, Asia, Middle East
Phone: +46 910 733 790
info@nordiclight.se

ITAB Lighting
North America
Phone: +1 614 421 8419
na@nordiclight.se

Please note that this product sheet is for a specific product and colour. The pictures may show examples of other available colours