ZYLINDER 3000, 930 (BBBL), WIDE FLOOD W/ GLASS, WHITE

- Diseño puro y minimalista/limpio
- Tres ángulos de haz diferentes para la distribución de la luz
- Equipo de control electrónico incorporado
- Fuente de luz LED de alta eficiencia con «chip integrado»
- Disponible en blanco, negro y gris

TECHNICAL SPECIFICATION

Product Code	288-503-10
Colour	White
Control	On/off
CRI light colour	930 (BBBL)
Delivered lumen output lm	2841
Driver	Built in
EEI	E
Light distribution	Wide flood
Lightsource	LED COB
Mains input voltage	220-240 V
Measurements A	103,5
Measurements B	227
Mounting	Track
Position	360°/90°
Lifetime	L80 B10, 50.000h
Protection	IP 20, class I
Start Time	Instant
System power W	21,6
Unit	mm
Weight	0,91

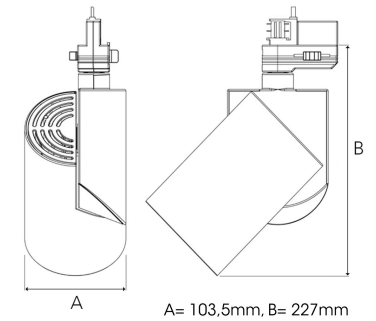

A= 103,5mm, B= 227mm

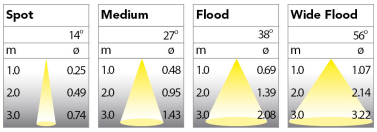

ITAB Lighting
Europe, Asia, Middle East
Phone: +46 910 733 790
info@nordiclight.se

ITAB Lighting
North America
Phone: +1 614 421 8419
na@nordiclight.se

Please note that this product sheet is for a specific product and colour. The pictures may show examples of other available colours