GLOBE MAXI 3000, 930 (BBBL), FLOOD, BLACK

ITAB

- Diseño grande y llamativo
- Luz funcional y decorativa
- Forma parte de una gama de lámparas de techo - disponible en varios tamaños y paquetes de lúmenes
- Montaje en riel trifásico o en el techo

TECHNICAL SPECIFICATION

Product Code	221-552-20
Colour	Black
Control	On/off
CRI light colour	930 (BBBL)
Delivered lumen output lm	2700
Driver	Built in
EEI	E
Light distribution	Flood
Lightsource	LED COB
Mains input voltage	220-240 V
Measurements A	600
Measurements B	483
Measurements C	600
Mounting	Suspended
Position	Fixed
Lifetime	L80 B10, 50.000h
Protection	IP 20, class I
Start Time	Instant
System power W	25
Unit	mm
Weight	9

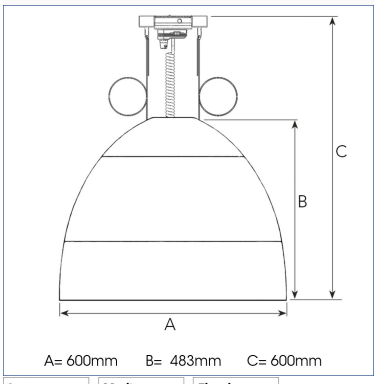

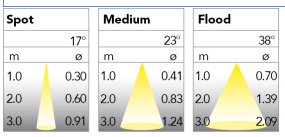

ITAB Lighting
Europe, Asia, Middle East
Phone: +46 910 733 790
info@nordiclight.se

ITAB Lighting
North America
Phone: +1 614 421 8419
na@nordiclight.se

Please note that this product sheet is for a specific product and colour. The pictures may show examples of other available colours