FLEX I 3000 (BBBL), 930, WIDE FLOOD, WHITE

ITAB

- Techo moderno, minimalista y de aspecto limpio
- Disponible en varios paquetes de lúmenes
- Instalación sin herramientas
- Disponible en blanco, negro y gris
- Retráctil y giratorio

TECHNICAL SPECIFICATION

Product Code	306-11071040062
Colour	White
Control	On/off
CRI light colour	930 (BBBL)
Delivered lumen output lm	2841
Driver	Stand alone, included
EEI	E
Light distribution	Wide flood
Lightsource	LED COB
Mains input voltage	220-240V
Measurements A	202
Measurements B	70
Measurements C	202
Measurements D	179
Mounting	Recessed
Position	360°/60°
Lifetime	L80 B10 50.000h
Protection	IP 20, class III
Sawing instructions unit	mm
Sawing instructions x	177
Sawing instructions y	191
Start Time	Instant
System power W	21,6
Unit	mm
Weight	1,1

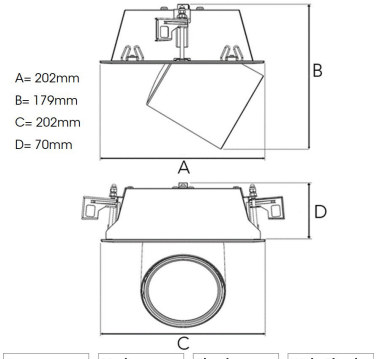

Spot		Medium		Flood		Wide Flood	
	14°		27°		38°		56°
m	ø	m	ø	m	ø	m	ø
1.0	0.25	1.0	0.48	1.0	0.69	1.0	1.07
2.0	0.49	2.0	0.95	2.0	1.39	2.0	2.14
3.0	0.74	3.0	1.43	3.0	2.08	3.0	3.22

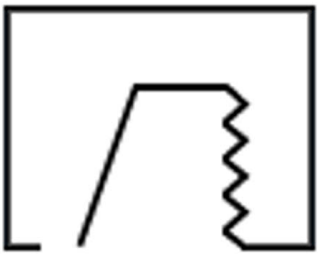

177 x 191mm

ITAB Lighting
Europe, Asia, Middle East
Phone: +46 910 733 790
info@nordiclight.se

ITAB Lighting
North America
Phone: +1 614 421 8419
na@nordiclight.se

Please note that this product sheet is for a specific product and colour. The pictures may show examples of other available colours