EASYPOINT 2 3000, 930 (BBBL), FLOOD , WHITE

- Distribuibile liberamente nel soffitto funzionale
- Un'unica linea per emissioni di lumen da bassi ad alti
- Facile da riposizionare e adattare ai cambiamenti di layout del punto vendita
- Soffitto discreto e pulito
- Disponibile in bianco, nero e grigio

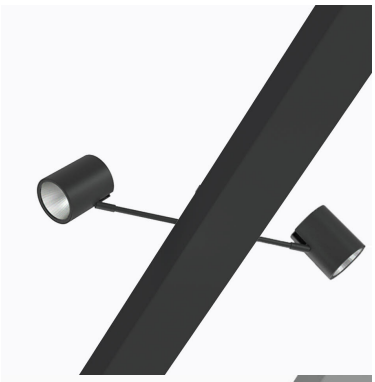

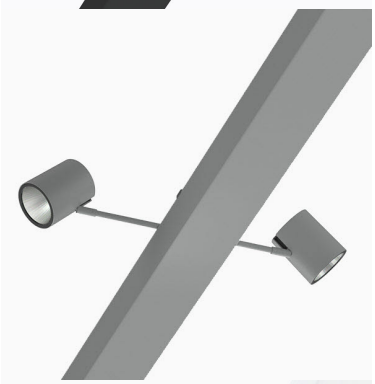

TECHNICAL SPECIFICATION

Product Code	321-525-10
Colour	White
Control	On/off
CRI light colour	930 (BBBL)
Delivered lumen output lm	2 x 2600
Driver	Built in
EEI	E
Light distribution	Flood
Lightsource	LED COB
Mains input voltage	220-240 V
Measurements A	74
Measurements B	400
Measurements C	103
Measurements D	84
Measurements E	150
Mounting	Functional ceiling
Position	360°/90°
Lifetime	L80 B10, 50.000h
Protection	IP 20, class I
Start Time	Instant
System power W	2 x 20,7
Unit	mm
Weight	1,65

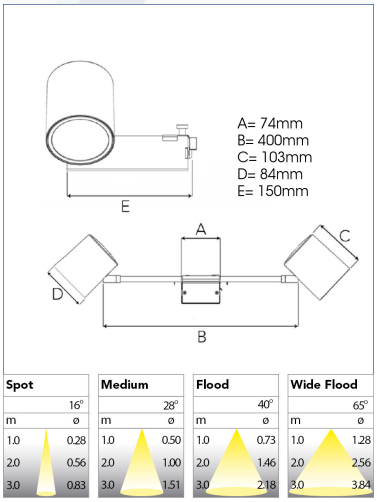

ITAB Lighting
Europe, Asia, Middle East
Phone: +46 910 733 790
info@nordiclight.se

ITAB Lighting
North America
Phone: +1 614 421 8419
na@nordiclight.se

Please note that this product sheet is for a specific product and colour. The pictures may show examples of other available colours