REVOC 4000, 940, WIDE FLOOD W/ GLASS, WHITE

ITAB

- Design puro ed essenziale
- Un'unica linea per emissioni di lumen da bassi ad alti; due dimensioni
- Facile da regolare
- Azionamento integrato nel binario
- Disponibile in bianco, nero e grigio

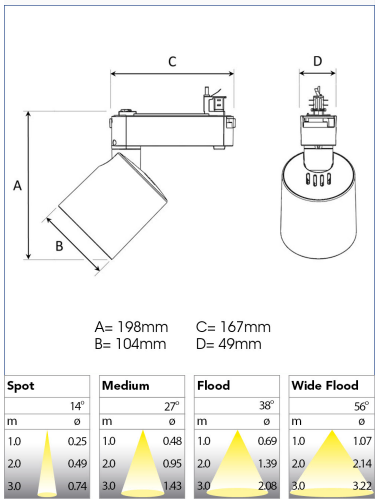

TECHNICAL SPECIFICATION

Product Code	287-553-10
Colour	White
Control	On/off
CRI light colour	940
Delivered lumen output lm	3800
Driver	Built in
EEI	E
Light distribution	Wide flood
Lightsource	LED COB
Mains input voltage	220-240V
Measurements A	198
Measurements B	104
Measurements C	167
Measurements D	49
Mounting	Track
Position	360°/90°
Lifetime	L80 B10, 50.000h
Protection	IP 20, class I
Start Time	Instant
System power W	36
Unit	mm
Weight	1,0

ITAB Lighting
Europe, Asia, Middle East
Phone: +46 910 733 790
info@nordiclight.se

ITAB Lighting
North America
Phone: +1 614 421 8419
na@nordiclight.se

Please note that this product sheet is for a specific product and colour. The pictures may show examples of other available colours